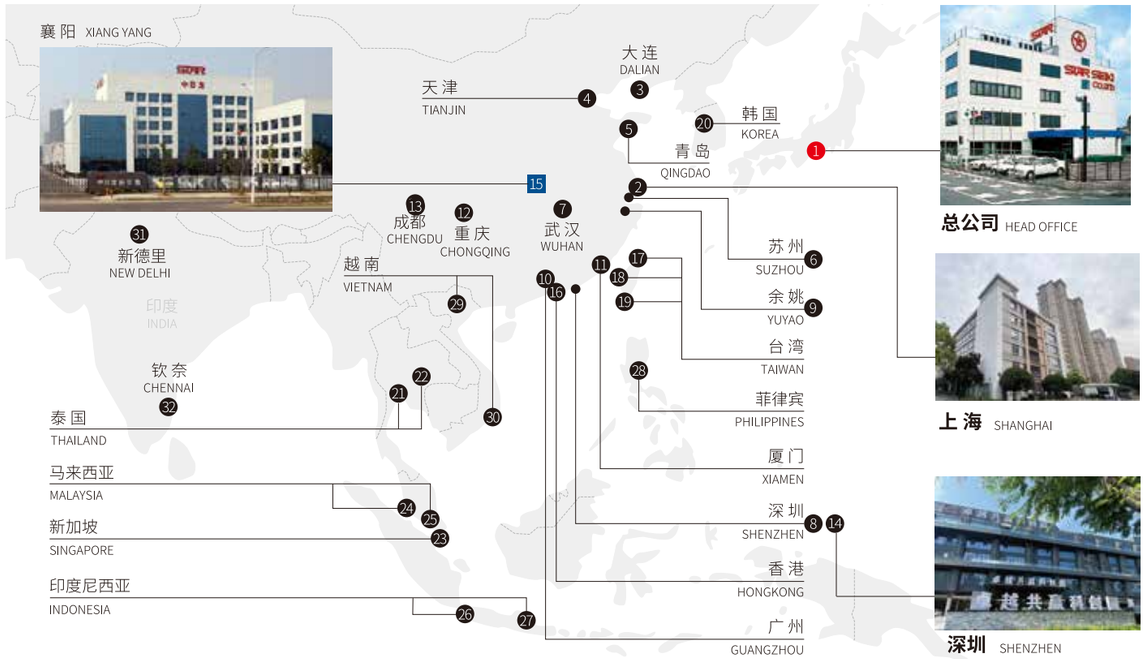

总公司 HEAD OFFICE

上 海 SHANGHAI

深圳 SHENZHEN

STAR ASIA NETWORK

国家／公司名 Country／Company Name		联系方式 Contact
1 Japan	STAR SEIKI CO., LTD. 3-133, Akita, Ohguchi-cho, Niwa-gun, Aichi Pref., 480-0132, JAPAN	TEL +81-587-95-7572 FAX +81-587-95-7573
2 China	星精机械（上海）有限公司 上海市徐汇区虹梅路2071号2号楼308室	TEL +86-21-5423 4571 FAX +86-21-5423 4570
3 China	星精机械（上海）有限公司 大连分公司	TEL +86-411-8756 2176 FAX +86-411-8756 2937
4 China	星精机械（上海）有限公司 天津分公司	TEL +86-22-5838 7675 FAX +86-22-5811 2975
5 China	星精机械（上海）有限公司 青岛分公司	TEL +86-532-5556 5517 FAX +86-532-5556 5518
6 China	星精机械（上海）有限公司 ★设有展示厅 苏州事务所	TEL +86-512-6805 8385 FAX +86-512-6805 8250
7 China	星精机械（上海）有限公司 武汉事务所	TEL +86-27-8425 3500 FAX +86-27-8479 2646
8 China	星精机械（上海）有限公司 ★设有展示厅 深圳分公司	TEL +86-755-2724 6655 FAX +86-755-2962 2341
9 China	星精机械（上海）有限公司 余姚事务所	TEL +86-574-6253 2721
10 China	星精机械（上海）有限公司 广州分公司	TEL +86-20-3708 4205 FAX +86-20-3708 4277
11 China	星精机械（上海）有限公司 厦门事务所	TEL +86-592-5779 994 FAX +86-592-5779 994
12 China	星精机械（上海）有限公司 重庆事务所	TEL +86-23-6036 0877 FAX +86-23-6036 0968
13 China	星精机械（上海）有限公司 成都事务所	TEL +86-28-6549 5545
14 China	星塔机械（深圳）有限公司	TEL +86-755-2724 6653 FAX +86-755-2724 6650
15 China	中日龙（襄阳）机电技术开发有限公司 ★设有展示厅	TEL +86-710-331 1813 FAX +86-710-332 0152
16 China	STAR SEIKI (HONGKONG) CO., LTD.	TEL +852-2687 6745 FAX +852-2690 4322

国家／公司名 Country／Company Name		联系方式 Contact
17 China	STAR SEIKI TAIWAN, INC.	TEL +886-2-2836 0039 FAX +886-2-2835 9987
18 China	STAR SEIKI TAIWAN, INC. TAICHUNG OFFICE	TEL +886-4-2463 1361 FAX +886-4-2463 1691
19 China	STAR SEIKI TAIWAN, INC. TAINAN OFFICE	TEL +886-6-273 8985 FAX +886-6-273 8948
20 Korea	STAR SEIKI KOREA CO., LTD.	TEL +82-32-817 0770 FAX +82-32-817 0771
21 Thailand	STAR SEIKI (THAILAND) CO., LTD.	TEL +66-2-651-0285 FAX +66-2-651-0288
22 Thailand	STAR SEIKI (THAILAND) CO., LTD. PRACHINBURI BRANCH	MOB +66-8-9927 4610
23 Singapore	STAR SEIKI SINGAPORE PTE. LTD.	TEL +65-6555-1391 FAX +65-6555-1392
24 Malaysia	STAR SEIKI (SINGAPORE) PTE. LTD. K.L. BRANCH	TEL +60-3-8601-2293 FAX +60-3-5621-0518
25 Malaysia	STAR SEIKI (SINGAPORE) PTE. LTD. J.B. BRANCH	TEL +60-7-598-7271 FAX +60-7-598-7275
26 Indonesia	PT. STAR SEIKI INDONESIA	TEL +62-21-7191729 FAX +62-21-7198870
27 Indonesia	PT.STAR SEIKI INDONESIA SURABAYA BRANCH	TEL +62-31-5453414
28 Philippines	STAR SEIKI PHILIPPINES INC.	TEL +63-49-544-0652 FAX +63-49-502-7953
29 Vietnam	STAR SEIKI (VIETNAM) CO., LTD.	TEL +844-3772-6270 FAX +844-3772-6271
30 Vietnam	STAR SEIKI (VIETNAM) CO., LTD. HO CHI MINH BRANCH	TEL +848-6297-9431 FAX +848-6297-9481
31 India	STAR SEIKI INDIA PRIVATE LIMITED	TEL +91-024-420-6807
32 India	STAR SEIKI INDIA PRIVATE LIMITED CHENNAI OFFICE	TEL +91-444-202-9923

STAR Quality First

星精機械（上海）有限公司
STAR SEIKI (SHANGHAI) CO., LTD.
http://www.starseiki.cn
上海市徐汇区虹梅路2071号2号楼308室
TEL：021-54234571 FAX：021-54234570

星精机械（上海）有限公司 深圳分公司
广东省深圳市宝安区沙井街道壆岗社区宝安大道8179-1号S1栋A301室
TEL：0755-27246655

因改良等原因,规格及外观有所改变时,恕不另行通知,敬请包涵。
All stated here is subject to change without advance notice.

ASIA
2026.06

STAR

GENERAL CATALOG
综合目录

ES-V SERIES

高速度、双系统、智能化ES-V系列机械手

ES-V SERIES ROBOTS
WITH HIGH SPEED, DUAL-SYSTEM INTEGRATION AND INTELLIGENT FUNCTIONALITY

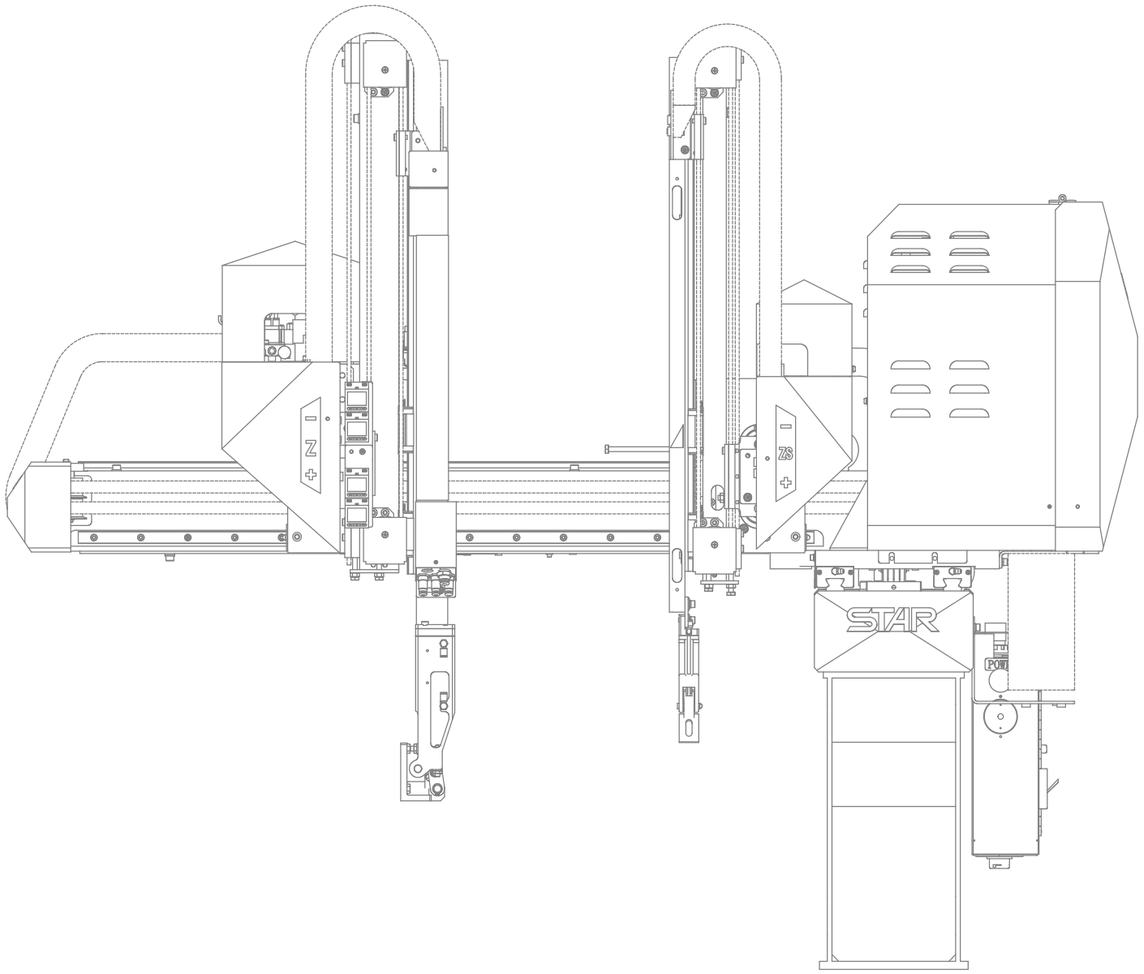

星精机械（上海）有限公司
STAR SEIKI (SHANGHAI) CO., LTD.
http://www.starseiki.cn

全球销售及售后服务据点 | NETWORK - GLOBAL

亚洲地区销售及售后服务据点（不含日本&中国） | ASIA AREA EXCEPT CHINA&JAPAN

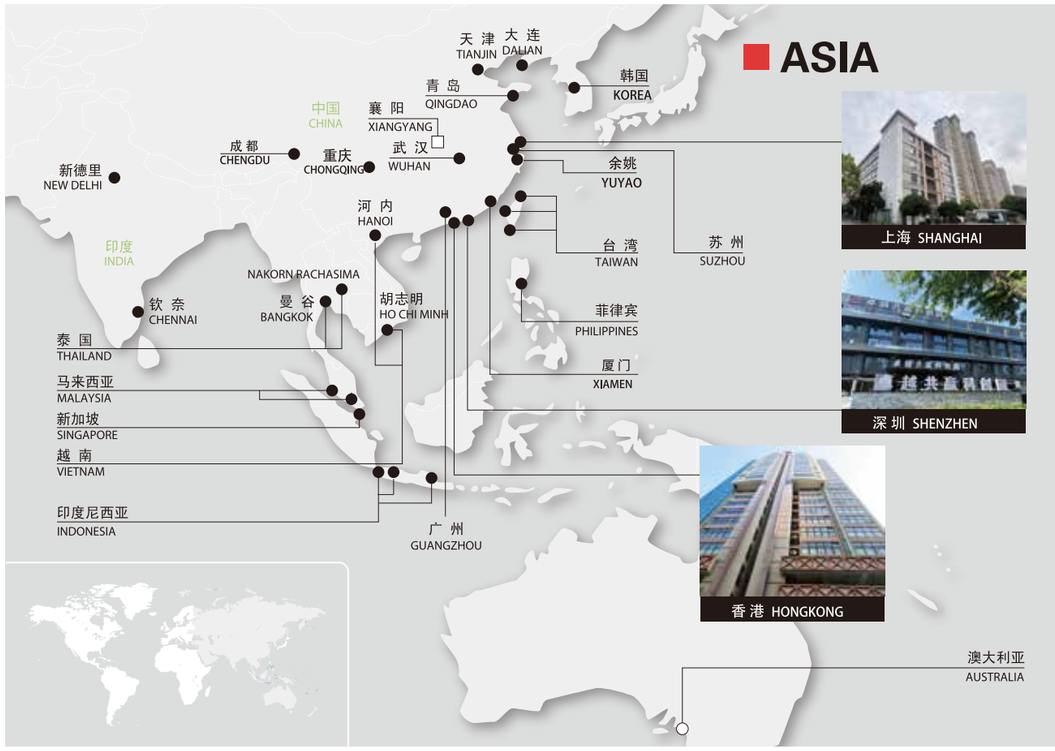

泰国 THAILAND

- STAR SEIKI (THAILAND) CO., LTD.
  BANGKOK BRANCH
  ☒ +66-2-651-0285
- STAR SEIKI(THAILAND)CO.,LTD.
  PRACHINBURI BRANCH

新加坡 SINGAPORE

- STAR SEIKI SINGAPORE PTE. LTD.
  ☒ +65-6555-1391

马来西亚 MALAYSIA

- STAR SEIKI (SINGAPORE) PTE. LTD.
  K.L. BRANCH
  ☒ +60-3-8601-2293
- STAR SEIKI (SINGAPORE) PTE. LTD.
  J.B. BRANCH
  ☒ +60-7-598-7271/3

韩国 KOREA

- STAR SEIKI KOREA CO., LTD.
  ☒ +82-32-817-0770

菲律宾 PHILIPPINES

- STAR SEIKI PHILIPPINES INC.
  ☒ +63-49-544-0652

印度尼西亚 INDONESIA

- PT. STAR SEIKI INDONESIA
  JAKARTA BRANCH
  ☒ +62-21-7191729
- PT. STAR SEIKI INDONESIA
  BEKASI BRANCH
  ☒ +62-21-82628770
- PT. STAR SEIKI INDONESIA
  SURABAYA BRANCH
  ☒ +62-31-5453414

越南 VIETNAM

- STAR SEIKI (VIETNAM) CO., LTD.
  IN HA NOI
  ☒ +84-24-3772-6270
- BRANCH OF STAR SEIKI (VIETNAM) CO., LTD.
  IN HO CHI MINH CITY
  ☒ +84-28-6297-9431

印度 INDIA

- STAR SEIKI INDIA PRIVATE LIMITED
  NEW DELHI OFFICE
  ☒ +91-124-4206-807
- STAR SEIKI INDIA PRIVATE LIMITED.
  CHENNAI OFFICE
  ☒ +91-44-4202-9923

日本销售及售后服务据点 | JAPAN

- 总部·工厂 / HEAD OFFICE / PLANT
  ☒ +81-587-95-7551(代)
  http://www.starseiki.com
- 出云工厂 / IZUMO PLANT
  ☒ +81-853-72-4311
- 关东支店 / KANTO BRANCH OFFICE
  ☒ +81-283-24-8211
- 名古屋支店 / NAGOYA BRANCH OFFICE
  ☒ +81-587-95-7557
- 大阪支店 / OSAKA BRANCH OFFICE
  ☒ +81-6-4255-8811

北美洲销售及售后服务据点/ NORTH AMERICA

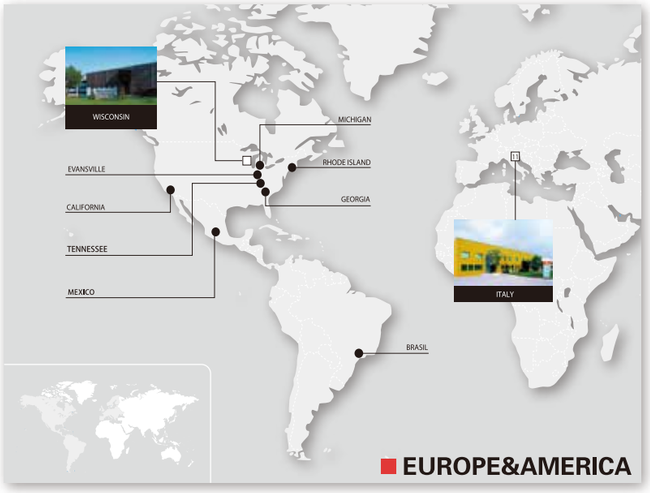

美国 U.S.A.

- STAR AUTOMATION, INC. MICHIGAN OFFICE
  ☒ +1-734-462-9522
- STAR AUTOMATION, INC. CALIFORNIA OFFICE
  ☒ +1-714-375-2400
- STAR AUTOMATION, INC. EVANSVILLE OFFICE
  ☒ +1-812-475-9947
- STAR AUTOMATION, INC. GEORGIA OFFICE
  ☒ +1-770-582-9350
- STAR AUTOMATION, INC. RHODE ISLAND OFFICE
  ☒ +1-401-434-0617
- STAR AUTOMATION, INC. TENNESSEE OFFICE
  ☒ +1-678-428-4202

美国 U.S.A.

- STAR AUTOMATION, INC. WISCONSIN
  ☒ +1-262-253-3550
  http://www.starautomation.com

墨西哥 MEXICO

- STAR SEIKI MEXICO S.A. DE C.V.
  ☒ +52-442-199-5180

南美洲 / SOUTH AMERICA

巴西 BRAZIL

- STAR SEIKI BRASIL LTDA.
  ☒ +55-11-3326-3349
  http://www.starseiki.com.br

欧洲 / EUROPE

意大利 ITALY

- STAR AUTOMATION EUROPE S.P.A.
  ☒ +39-41-57-85-311
  http://www.star-europe.com

大洋洲 / OCEANIA

澳大利亚 AUSTRALIA

- RADIUS TECHNOLOGY PTY. LTD.
  销售代理店 SALES AGENCY
  ☒ +61-3-9587-1233

产品特点
PRODUCT FEATURES

全新升级 | NEW UPGRADE

1 高智能
High Intelligence

全系标配智能化功能，自带平滑移动、速度切换、IOT数据监视、半全开放系统切换，远程段取换等STAR独家功能优势，支持程序上传下载快捷，换模调机高效，生产数据可视化管理。

All series standardized Intelligent Functions with Exclusive STAR FeaturesSmoothing Function, IOT data monitoring, STAR exclusive Mode/FullNC system switching, and exclusive remote cond data setup. It supports program upload & download to speed up mold change and mold adjustment, realizing visualized management of production data.

2 高精度
High Precision

高阶选配，适配精密复杂工况。可选配多轴直线/圆弧插补、扭矩限制、成型机周期联动、智能加减速与空气流量监测等，精准取出异形工件，自适应各类生产节拍，满足高精度、个性化生产需求。

Premium Optional Functions for Precision & Complex Working Conditions. Serval optional functions available: multi-axis linear/arc interpolation, torque limit, imm machine cycle link, intelligent acc & dec, air flow monitoring, etc.It accurately picks special-shaped product and adapts to various production cycles to meet high-precision and customized manufacturing demands.

3 低能耗
Low Energy Consumption

节能降耗，降本增效。搭载全新S-III 真空发生器，空气消耗量降低约10%，长期生产可显著降低能耗成本与运维费用。

Save Energy & Costs for Higher Profit
Equipped with new S-III vacuum generator, air consumption reduced by 10%. It greatly cuts energy expenses for long-term production and lower maintenance costs.

4 高拓展
High Expandability

美学机身，高拓展性。钻石切割工业外观，质感出众，适合现代标准化工厂。

Sleek Industrial Design with Strong Expandability. Diamond-cut industrial appearance with premium texture, suitable for modern standardized factories.

5 易运维
Easy Maintenance

极简结构，易运维。取消全系制品上下辅助平衡气缸，日常保养、设备检修轻松高效；升级拖链规格，设备容积率优化，预留充足改造升级空间，大幅降低后期改造成本。

Simplified Structure with Low Failure Rate
Remove balance cylinders for product vertical axis across all series , enabling effortless daily maintenance and equipment inspection. The tow chain specification is upgraded, equipment space utilization optimized with ample reserved room for reconstruction and upgrades, drastically reducing future modification costs.

6 高产能
High Productivity

极速提效，产能跃升。经典机型全面迭代，全系取出周期较ES-IV平均提升 8%以上，高效适配各类注塑场景，快速提升产能。

Boost Efficiency & Scale Up Output
Fully upgraded classic models. The overall cycle of all series is improved by over 8% compared with ES-IV, perfectly fitting all molding scenarios to rapidly boost production capacity.

8 寸全新智能操作盒

8 inch new intelligent Pendant

搭配电容式触摸屏，实现页面上下滑动、滚动等类似智能手机的操作方式，操作简单、快捷。

With capacitive touch screen, the page can slide up and down, scroll and other similar operations to smart phones,operation is simple and fast.

功能 | FUNCTION

平滑移动
Smoothing Function

开启平滑移动后，机械手改用平滑移动设定值作为到位判断阈值，相邻点位之间不停顿，连续运动，缩短机械手整体运行周期.

When enabled, the robot adopts smooth motion settings as the in-position judgment threshold. It moves continuously without pausing between point-to-point, shortening the overall robot cycle.

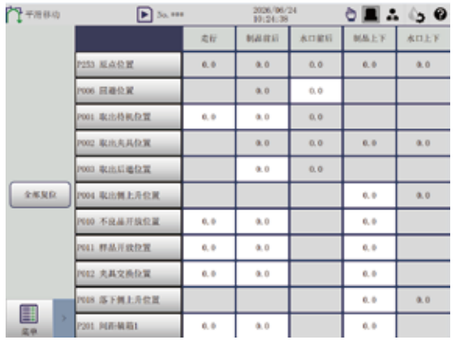

速度切换
Speed Switch

利用速度切换功能，可以对轴移动分段调速。便于客户根据需求设置轴移动各段速度，第二段低速移动可减少惯性冲击，提高定位精度。

This function supports segmented speed control for axis moving. Users may set distinct speeds for each moving segment as needed. Low-speed in the second segment lessens inertial impact and enhances positioning precision.

直线插补
Linear Interpolation

从直线插补的起始点移动到直线插补设定的结束点。各轴同时开始移动，并同时到达结束点。

It moves from the start point to the end point of the linear path. All axes start moving simultaneously and reach the end point at the same time.

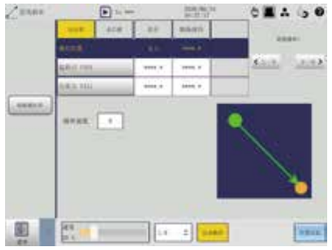

圆弧动作
Arc Interpolation

以选择的两个轴为平面进行圆弧动作。从起始点开始移动，经过经过点，到达结束点。

Arc motion is performed on the plane formed by the two selected axes. It moves from the start point, through the path point, and reachs the end point.

IoT功能
IoT Function

将选中的Iot数据，然后间隔时间发送上传csv文件到FTP服务的指定地址中。

Select the required IoT data, and the system will upload csv files to the address of the FTP server at set time intervals.

远程段取
Remote Condition Data

可上传客户数据，将选中的客户数据，上传到服务器。
可从服务器下载客户数据到操作盒。
可从服务器读取下一次生产需要的客户数据。

Supports uploading cond data to the server.
Cond data can be downloaded from the server to the pendant.
It can also read out cond data required for the next production from the server.

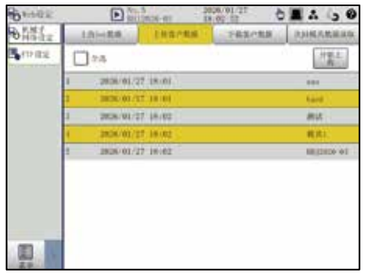

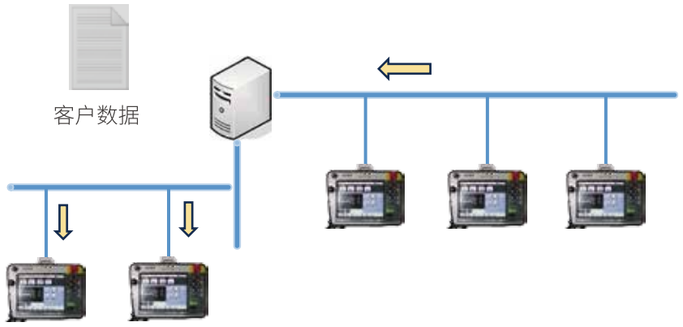

固定模式-全开切换
Mode - FullNC Switch

切换系统设定开关中的[固定模式-全开切换]状态后，重新上电，系统可以按照切换后的仕样进行显示、操作、动作。

After toggling the [Mode-FullNC Switch] in the system setting, the system will display, operate and execute movements according to the switched specifications after power on again.

FULL NC编程
FULL NC Programming

设计文字编程系统，程序通俗易懂

Design a text-based programming system with intuitive and easy-to-understand programs.

设计全新编程界面，减少设定时间，提高编程效率。

Design newly programming interface to reduce setup time and boost programming efficiency.

设计全新编程命令，减少编程量，降低编程难度。

Design newly programming commands that reduce coding volume and lower programming difficulty.

FULL NC编程对比
FULL NC Programming comparison

FULL NC(无模式) FULL NC(NO MODE)	ES-IV FULL NC	ES-V FULL NC
主程序步数 Main program steps	43	30
子程序个数 Subprogram count	18	9
特殊Memory使用数 Special memory usage	7	0

姿势NC选项 / POSTURE NC OPTION

◆ 优点 ADVANTAGE

◎与机械手主机一起最大可7轴控制，实现了与多关节机器人相同的自由动作。
It can achieve maximum 7-axis control together with the robotic arm , achieving the same free movement as a multi joint robot.

◎姿势NC单元多自由度的运转，可简化夹具的结构，间接降低客户的使用成本。
Operation of posture NC unit with multiple degrees of freedom, can simplify the structure of the chuck, and indirectly reduce customer's costs.

◎搭载姿势NC后，提升成型周边装置的联动效率。
After equipped with posture NC, the linkage efficiency of devices other than molding is improved

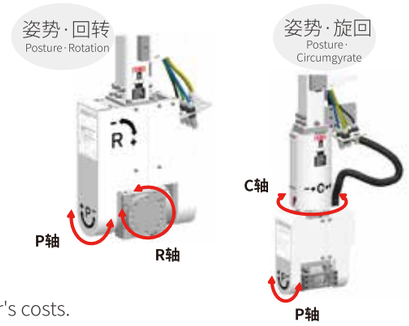

※P轴：前后翻转动作轴
P-axis: Forward and backward flipping action axis
※R轴：垂直回转动作轴
R-axis: vertical rotation action axis
※C轴：水平旋回动作轴
C-axis: horizontal rotation action axis

◆ 运用场景 APPLICATION SCENARIO

◎ 特殊产品的取出
Special products extract

◎ 带角度浇口的剪切
The cut with angle gate

◎ 插件的放置
Placement of insert

◎ 产品装箱的高自由度
High degree of freedom for product packaging

缓冲姿势部选项 / POSTURE UNIT W/CUSHIONING OPTION

◆ 优点 ADVANTAGE

◎相较标准姿势部，可有效抑制姿势翻转与复位过程产生的振动，运行更加平稳。
Compared with the standard posture unit, it can effectively suppress vibration generated during posture reversal and return movement for stabler operation.

◎适配短周期高速成型工况，大幅提升连续作业稳定性，保障高节拍下产品取出精度。
Suitable for short-cycle high-speed molding conditions, greatly improves continuous operation stability and ensures precision of product extraction under high cycle rates.

◎减少振动带来的机构磨损，延长姿势部整体使用寿命，降低设备后期维护成本。
Reduces mechanism wear caused by vibration, extends overall service life of the posture unit and cuts down later maintenance costs of equipment.

缓冲姿势部
Posture unit
wjcushioning

◆ 运用场景 APPLICATION SCENARIO

◎ 短周期高速注塑成型作业
Short-cycle high-speed injection molding operation

◎ 精密薄壁产品高速取出作业
High-speed extraction of precision thin-walled products

◎ 高节拍连续自动化生产场景
High-cycle continuous automatic production scenarios

◎ 易磕碰产品无震动取料工序
Vibration-free material picking for collision-prone products

变化点 | CHANGE POINT

01

全新SIII真空发生器,省气更节能
Equipped with new s-lll vacuum generator, air saving and more energy-efficient.

-10%

搭载全新SIII真空产生器，空气消耗量降低10%，长期生产可大幅缩减能耗成本。

The vacuum unit of ES-V series is equipped with new S-lll vacuum generator, air consumption reduced by about 10%,It greatly cuts energy expenses for long-termproduction and lower costs.

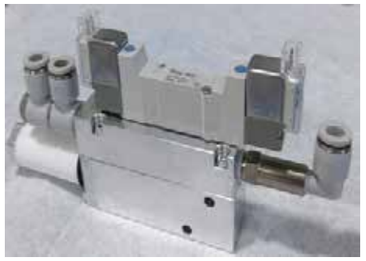

02

美观升级,改造空间更大
Aesthetic upgrade, more space forupgrade.

制品上下拖链加宽，预留充足改造升级空间，可阵低客户改造成本。

The product's upper and lower drag chains are widened to reserve ample space for future retrofits and upgrades, reducing customers' renovation costs.

机械手功能 | FUNCTIONS

STAR ES-V SERIES

标准功能

	功能名	功能说明
取出侧	取出下降待机	开模完毕前， 夹具下降至模具附近待机， 有效缩短取出周期。可任意变更设定位置。
	前进取出侧姿势控制	在姿势动作的状态下通过安全门上方。为避免在姿势动作状态下夹具与走行体或者模具上方障碍物干涉，姿势动作的前后位置可以任意设定。
	吸着确认单元（1回路）	使用真空发生单元1回路取出产品。
	自由滑移取出	取出有扣位的产品时， 在抓取到产品后根据轴设定值移动， 解除扣位后取出产品。
	顶针联动	抓取到产品后， 通过与注塑机的顶针联动取出产品。
	顶针后退联动	抓取住产品后， 通过注塑机的顶针联动， 取出产品。
	水口模内开放	产品或水口从模具上剥离后， 需要直接在模内开放时选择此功能。
	前后自由伺服点	在产品夹取位置限制前后轴的伺服马达扭矩， 防止对手臂增加负荷时造成损伤。
走行	走行途中姿势	在走行途中与姿势动作、走行复归开始同时进行姿势复位， 可缩短全周期。
	浇口途中落下（走行·复归）	浇口往返走行途中进行开放动作。
	不良品排出	与注塑机发出的不良品信号联动， 进行不良品排出动作。
	初期成型品排出	自动开始后， 根据初期不良品排出计数器的设定， 将设定数值内的产品开放到不良品位置。
	横走行待机	如果模具上方有障碍物， 机械手或者夹具在模具没有完全打开的情况下有干涉时，机械手可以在模具外等待模具完全打开后走行复归。
	水口途中开放（走行·复归）	水口途中开放（走行·复归）
落下侧	落下侧下降途中姿势	在产品开放下降途中进行姿势反转动作。在上升途中进行姿势反转复位动作。
	装箱点(各轴256点)	与输送带或排列机等装箱设备联动， 进行产品的装箱动作。（各轴256点）
	自由装箱点（8级，共1024点）	设定从注塑机中取出的产品的随机开放顺序。
	输送带启动信号	产品开放完毕后， 启动输送带动作信号。
其他	平滑移动	对移动完成的判断距离进行调整，可以让各轴动作间的连接更加顺畅。
	速度切换	可根据客户动作需求，自由追加和删除速度切换的高速和低速的位置点、轴、速度。
	固定模式-全开放切换	可进行固定模式-全开放仕样切换。
	Iot功能	通过LAN网络连接上传Iot数据到服务器，上传客户数据到服务器，下载客户数据到操作盒，读取次回客户数据到操作盒。
	分步教示功能	对机械手的设定进行分步教示，使操作人员可以快速对机械手进行设置，使用。
	操作权限分级管理	对不同操作权限的人员分配不同的密码，便于机械手的使用管理。
	数据管理	方便操作员对机械手的客户数据，履历，照片等数据进行拷贝和上传。
	生产管理	输入预定生产数量即可显示生产完成时间。另有显示生产实际数量统计表和抽样检测功能，更有利于成型品的品质管理。
	伺服休眠功能	在超过设定时间后的待机中， 关闭马达电源。
	USB通信端口	用于操作盒数据管理功能，可下载及复制数据。
	3国语言切换	操作盒的显示画面可切换3国语言。日语・英语・汉语(简体字)为基本的切换语言。
	背景灯自动OFF	超过[显示OFF时间」设定的时间如果不操作操作盒， 背景灯则关闭。

选项功能

	功能名	选项编号	功能说明
取出侧	吸着2点开放	0001-10	使用真空发生单元2回路取出产品。
	吸着4点开放	0001-11	使用真空发生单元4回路取出产品。
	夹具减压阀	0081-01	调整夹具的抓取力。
	旋转功能	0025-01~04	进行夹具板旋转动作。可以选择在模内、模外、落下侧进行旋转动作。
	上升途中闭模	0055-01	模内上升途中， 使注塑机开始闭模，缩短开模时间, 提高周期的仕样。
	制品确认 (L4)	0087-02	上升途中安装限位开关， 检知产品。
落下侧	剪切回路(夹具内)	0008-01	使用夹具内气剪 (1回路) 剪切水口的时候， 需要此仕样。自动运转时在落下侧的产品开放位置， 产品开放前进行此动作。
	制品2点开放	0001-02	在两处进行制品开放动作。 产品夹取变为2回路。
	制品4点开放	0001-03	在四处进行制品开放动作。 产品夹取变为4回路。
	NT剪切・可动侧(有单元)	0009-01	以处理产品水口为目的, 在落下侧的走行导轨端安装NT单元气剪, 切断水口。
其他	警报灯 (红色・无蜂鸣器)	0024-01	机械手发生警报 (异常) 时, 警报灯亮。因机种不同, 警报灯的安装位置也有所不同。 需确认。
	自动快速交换用夹具 (气压式)	8003-01	可快速装卸夹具。
	操作盒支架	0005-11	操作盒专用支架。
	欧规 12	0063-02	欧规 12
	欧规 67	0063-03	欧规 67

STANDARD FUNCTIONS

	Function Name	Description
Product Extract Side	Descent stand-by	Shorten the cycle time by making the product-side/runner-side vertical arm stand by just above the mold. Setting position is adjustable.
	Crosswise product extract side posture control	Used to first carry out posture action on the extracting side and then start traverse action after extracting vertically extended products. Avoid interference with an obstacle on mold or the traverse rail, used to carry out the posture action after the completion of advance action. Crosswise position is adjustable.
	Energy saving vacuum confirmation unit(1circuit)	Products are extracted with vacuum generator 1 circuit.
	Free extract for under-cut mold	Extracting the products with snap joints, moving it according to axis setting after taking the products. The products can be extracted after unlocking the joints.
	Ejector link	Product extraction is performed connecting with the ejector of IMM.
	Ejector return link	The ejector of IMM is interlocked after holding a product.
	Runner release within mold	Used to release products or runners within mold after pulling them out of the mold.
	Crosswise free servo point	The torque of the servo motor of an anteroposterior axis is restricted in a product chuck position. The damage to when load is added to an arm is prevented.
Traverse	Posture control during traverse	All the cycles can also be shorten by carrying out traverse return and posture return together after products were released during traverse action.
	Midway Sprue Release(Traverse·Return)	Sprue is released during traverse or return motion.
	Defective product Release	Defective products are separated from other products interlocked with the defect signal of IMM.
	Initial Products Release	the number of extracted products and sprues preset with the counter to the ejection position after the start of automatic operations when faulty products exist after the continuation of molding ollowing the replacement of the metal mold or material . Normal operations are then performed after this.
	Delayed traverse	Make the unloader stand by out of the molding machine's door if there are obstacles in the mold moving section.
	Midway Runner Release(Traverse·Return)	Midway Runner Release(Traverse·Return)
Product Release Side	Posture midway descent at release side	Operation of posture reversal is carried out in the middle of downward of product opening. Return operation of posture reversal is performed in the middle of a rise.
	Point packaging（Max 256 points)	Packaging operation carried out by linking with packaging device of conveyer or of pallet changer. (Max 256 points)
	Point free packaging（8 stage,MAX 1024 points）	Set the order to randomly release the products extracted form the molder.
	Start signal of conveyor	After opening a product wide, the signal of a conveyor start is taken out.
Other	Smoothing Move	Adjusting the judgment distance for movement completion can make the connection between actions of each axis more smoother.
	Speed Change	According to the customer's motion requirements, the position points, axes, and speeds of the high-speed and low-speed can be freely added and deleted.
	ModeType-FullNC type change	switch between ModeType and FullNC type.
	Iot function	Realize the functions of uploading IoT data to the server through LAN network connection, uploading user data to the server, downloading user data to pendant, and reading the next user data into pendant.
	Step by step Teaching function	Step-by-step instructions for setting up and using the robotic arm to allow operators to quickly configure and operate the machine.
	Operation authorization management	Assign different passwords to personnel with different levels of operating permissions to facilitate the management of the robotic arm's usage.
	Data management	Facilitate operators to copy and upload data such as user data, history, and photos for the robotic arm.
	Production control feature	Inputs the number of pieces to produced,and the estimated time of production is displayed,Other fertrues,such us graphing of prodction results and sampling also contribute to better produce quality control.
	Servo sleep feature	Motor power is turned off after the set time.
	USB communication port	Used for the data management function of the pendant,allowing data download and duplication.
	Three language exchange	Language switching between three languages can be used for display. Basically used languages are Japanese, English, and Chinese(new character format).
	Back light Auto OFF	The backlight goes out if no pendant operation is performed for the period set with the［DISPLAY OFF TIME］ function.

OPTION FUNCTIONS

	Function Name	Code no.	Description of option
Product Extract Side	Release products at two different points W/Vacuum	0001-10	Products are extracted with vacuum generator 2 circuits.
	Release products at four different points W/Vacuum	0001-11	Products are extracted with vacuum generator 4 circuits.
	Chuck pressure regulator	0081-01	Adjust the gripping force of the chuck .
	Rotation Unitregulator	0025-01~04	Used to prevent product from hitting the robot in the mold, within the mold or on the release side by rotating the chuck plate.
	Mold close during arm ascent	0055-01	Used to shorten the molding time by starting the mold closing on the way to ascent.
	Product confirmation L4	0087-02	Detects the product mounting the limit switch in the middle rise.
Product Release Side	Air nipper in chuck circuit	0008-01	Used to take the cutting of direct gates or side gates with the air nipper in the chuck plate. When in automatic operation, cutting is made at product release position before the product release.
	Release product at two different points	0001-02	Two different products are extracted and released to different positions on the release side. Two circuits are required for the chucking.
	Release product at four different points	0001-03	Four different products are extracted and released to different positions on the release side. Four circuits are required for the chucking.
	NT gate cutting on crossmember of moving mold side (w/unit)	0009-01	For purposes of product gate processing, the air nipper in the NT unit mounted at the end of the release-side traverse rail is used to cut gates at 2 points.
Other	Alarm Lamp (Red color,w/o buzzer)	0024-01	The alarm lamp is switched on a light when there is a alarm (error) in the robot. Mounting positions are different with robots.
	Quick chuck change automatic (air sw)	8003-01	One-touch simple mating/demating of chuck plate.
	Pendant stand	0005-11	Stand of operation pendant only.
	EUROMAP 12	0063-02	EUROMAP 12 Specification
	EUROMAP 67	0063-03	EUROMAP 67 Specification

STAR ES-V SERIES

STAR机种名称说明 | IMPROVED PRODUCTION EFFICIENCY

ES W - 800 s V

- **ES**：机种系列名，其他还有EG系列、SP系列等
  Series of models,others, EG series, SP series etc.
- **W**：W表示机器为双截，不带W为单截机型
  With W means the robot is double arm. W/O W means it is single one.
- **800**：制品臂标准上下行程长度，ESW-800sV表示此机种标准制品臂上下行程为800mm
  The normal vertical stroke of product arm. For ESW-800sV,it means the normal vertical stroke of product arm is 800mm.
- **s**：s表示水口臂，带s为双臂机型，不带s为单臂机型
  s means runner arm.It is two vertical arms with s. On the contrary,it's single arm without s.
- **V**

■ 例：ESW-800sV即为ES-V系列，标准制品臂上下行程为800mm的双截带水口臂的双臂机型。
ES-1200V即为ES-V系列，标准制品臂上下行程为1200mm的单截无水口臂的单臂机型。
Example:ESW-800sV is one of ES-V series, which is a double-arm model with a standard vertical stroke of 800mm.
ES-1200V is one of ES-V series, which is a single-arm model with a standard vertical stroke of 1200mm.

机器尺寸图注字母意义说明 | The machine size drawing is indicated by letters

A	全高	Overall height
B	全宽	Overall width
C	走行行程	Traverse stroke
D	落下侧突出位置	Overhang,release side
E	取出侧突出位置	Overhang,product side
F	制品侧上下行程	Ⓟ Vertical stroke
G	制品侧上下待机位置	Ⓟ Vertical standby
H	夹具安装位置上方有效尺寸	Bottom of crosswise to chuck mount position
I	前后单元	Crosswise arm
J	本体厚度	Thickness
K	水口侧上下待机位置	Ⓡ Vertical standby
L	制品前进MAX	Ⓟ Crosswise reach max
M	制品前后行程MAX	Ⓟ Crosswise stroke max
N	制品前后待机MIN	Ⓟ Crosswise standby min
O	制品臂、水口臂接近MIN	ⓅⓇ Proximity min
P	Ⓡ：水口侧前后行程MAX	Ⓡ Crosswise stroke max
Q	Ⓡ：水口侧前后待机MIN	Ⓡ Crosswise standby min
d	拖链伸出距离	The protruole distance of cable chain

全伺服驱动机械手
Full servo drive robot

单截 Single arm

30~150ton 注塑机用
Injection press range 30~150ton

综合参数 | GENERAL SPECIFICATIONS

电 源 Power Source	常用气压 Air Pressure	驱动方式 Drive System	姿势(气缸) Posture (Air Cylinder)	气动姿势部推力(气压：0.5Mpa时) Air Cylinder Driving Force (Air Pressure at 0.5Mpa) 最大可搬重量 Max. Load	姿势力矩 Posture Torque	控制箱 Control Box
AC200V +20%/-10% 50/60Hz(单相) Single Phase	0.5Mpa	AC伺服马达 AC Servo Motor	90°固定 90°Fixed	标准姿势部：3kg Standard posture: 3kg (含夹具重量 Incl Chuck Weight)	5.0N·m	ES-V

机 种 Model	行程(移动量)(mm) Stroke 制品上下 Ⓟ Vertical	水口上下 Ⓡ Vertical	前 后 Crosswise	走 行 Traverse	电源设备容量 (KVA) Electric Consumpiton	最大消费电力 (KW) Max Power Consumpiton	机器重量(kg) Net Weight 本 体 Main Body	操作盒 Pendant	空气消耗量 (Nℓ⁄周期) Air Consumption (Nℓ/Cycle)
ES-650V	650 [800]	—	70～550 [70～670]	1200 [1000] [1400] [1600]	1.8	1.1	198	1.7	1.55
ES-650sV		700 [850]	Ⓟ 220～550 Ⓡ 100～430 [Ⓟ 220～670 Ⓡ 100～550]		2.4	1.4	214		

◎[ ]尺寸表示选项行程。
◎本体重量包括控制箱及电缆线的重量。
◎Ⓟ表示制品侧手臂，Ⓡ表示水口侧手臂。

◎Figure in [ ] shows option stroke.
◎Net weight includes the weight of interlock box and driver box.
◎In the column of stroke,Ⓟstands for product side arm and Ⓡ stands for runner side arm.

外观尺寸 | OUTER DIMENSIONS

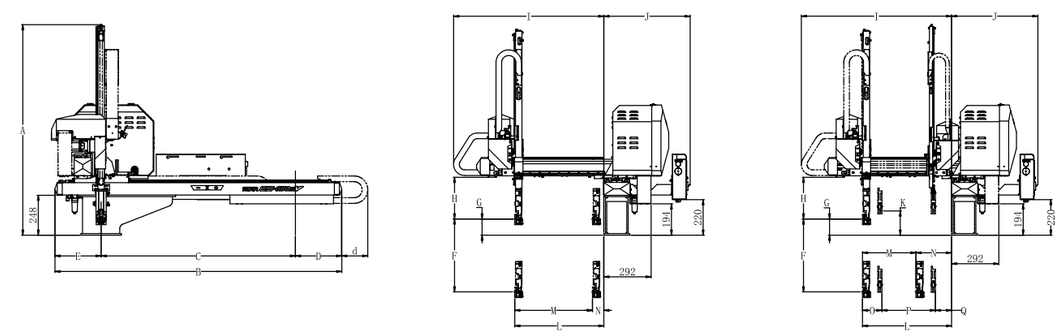

◎[ ]内的尺寸表示选项行程。/ Figure in [ ] shows option stroke.
◎水口夹的厚度为25mm。/ Thickness of runner chuck is basically about 25 mm.
◎姿势部厚度为45mm。但根据配管方式不同,此尺寸多少会有些不同。/ Thickness of posture area is basically about 45 mm (depends on tubing)
◎水口侧上下行程比制品侧上下行程长50mm。/ Runner side vertical stroke is 50 mm longer than that of product side.

◎*1表示F尺寸为800mm。 / *1 When dimension F is 800 mm.
◎*2表示C尺寸为1000mm。/ *2 When dimension C is 1000 mm.
◎*3表示C尺寸为1400mm。/ *3 When dimension C is 1400 mm.
◎*4表示C尺寸为1600mm。/ *4 When dimension C is 1600 mm.
◎*5表示L尺寸为670mm。/ *5 When dimension L is 670 mm.

(mm)

机种 Model	A	B	C	D	E	F	G	H	I	J	K	L	M	N	O	P	Q
ES-650V	1272 [1419]*1	1770 [1770]*2 [2190]*3 [2190]*4	1200 [1000]*2 [1400]*3 [1600]*4	285 [285]*2 [305]*3 [305]*4	285 [485]*2 [485]*3 [285]*4	650 [800]*1	100	257	928 [1048]*5	533	—	550 [670]*5	480 [600]*5	70	—	—	—
ES-650sV	1300 [1436]*1										150		330 [450]*5	220	120	330 [450]*5	100

※反操作时E值为299、[499]*2、[499]*3、[299]*4
D值为271、[271]*2、[291]*3、[291]*4
As anti-operator side E is 299、[499]*2、[499]*3、[299]*4
D is 271、[271]*2、[291]*3、[291]*4

※d值正操作时为162、[162]*2、[0]*3、[0]*4
反操作时为93、[93]*2、[0]*3、[0]*4
As operator side d is 162、[162]*2、[0]*3、[0]*4
anti-operator side d is 93、[93]*2、[0]*3、[0]*4

STAR ES-V SERIES

全伺服驱动机械手
Full servo drive robot

单截 Single arm

100~350ton 注塑机用
Injection press range 100~350ton

综合参数 | GENERAL SPECIFICATIONS

电 源 Power Source	常用气压 Air Pressure	驱动方式 Drive System	姿势(气缸) Posture (Air Cylinder)	气动姿势部推力(气压: 0.5Mpa时) Air Cylinder Driving Force (Air Pressure at 0.5Mpa)		控制箱 Control Box
				最大可搬重量 Max. Load	姿势力矩 Posture Torque	
AC200V +20%/-10% 50/60Hz(单相) Single Phase	0.5Mpa	AC伺服马达 AC Servo Motor	90°固定 90°Fixed	标准姿势部: 5kg[8kg] Standard posture: 5kg[8kg] (含夹具重量 Incl Chuck Weight)	13.1N·m [20.6N·m]	ES-V

机 种 Model	行程(移动量)(mm) Stroke				电源设备容量 (KVA) Electric Consumpiton	最大消费电力 (KW) Max Power Consumpiton	机器重量(kg) Net Weight		空气消耗量 (Nℓ/周期) Air Consumption (Nℓ/Cycle)
	制品上下 Ⓟ Vertical	水口上下 Ⓡ Vertical	前 后 Crosswise	走 行 Traverse			本 体 Main Body	操作盒 Pendant	
ES-800V	800 [1000] [1200]	–	90～850 [90～1000]	1400 [1200] [1600] [1800]	2.3	1.4	241	1.7	2.00
ES-800sV		850 [1050] [1250]	Ⓟ 245～850 Ⓡ 105～710 [Ⓟ 245～1000 Ⓡ 105～860]		3.5	2.1	261		

◎[ ]尺寸表示选项行程。
◎本体重量包括控制箱及电缆线的重量。
◎Ⓟ表示制品侧手臂,Ⓡ表示水口侧手臂。
◎关于最大可搬重量,详情请咨询敝司营业担当。

◎Figure in [ ] shows option stroke.
◎Net weight includes the weight of interlock box and driver box.
◎In the column of stroke,Ⓟstands for product side arm and Ⓡstands for runner side arm.
◎For details of the maximum allowable weight, please confirm with our sales man.

外观尺寸 | OUTER DIMENSIONS

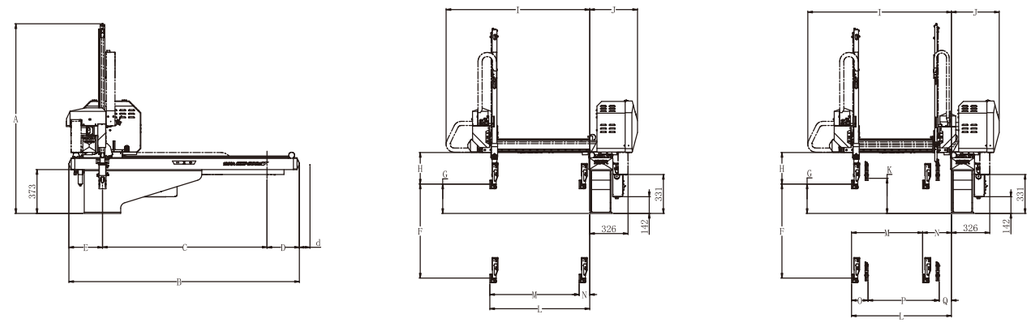

◎[ ]内的尺寸表示选项行程。/ Figure in [ ] shows option stroke.
◎水口夹的厚度为25mm。/ Thickness of runner chuck is basically about 25 mm.
◎姿势部厚度为69mm。但根据配管方式不同,此尺寸多少会有些不同。/ Thickness of posture area is basically about 69 mm (depends on tubing)
◎水口侧上下行程比制品侧上下行程长50mm。/ Runner side vertical stroke is 50 mm longer than that of product side.

◎*1表示F尺寸为1000mm。 / *1 When dimension F is 1000 mm.
◎*2表示F尺寸为1200mm。/ *2 When dimension F is 1200 mm.
◎*3表示C尺寸为1200mm。/ *3 When dimension C is 1200 mm.
◎*4表示C尺寸为1600mm。/ *4 When dimension C is 1600 mm.
◎*5表示C尺寸为1800mm。/ *5 When dimension C is 1800 mm.
◎*6表示L尺寸为1000mm。/ *6 When dimension L is 1000 mm.

(mm)

机种 Model	A	B	C	D	E	F	G	H	I	J	K	L	M	N	O	P	Q
ES-800V	1580 [1780]*1 [1980]*2	1962 [1962]*3 [2382]*4 [2382]*5	1400 [1200]*3 [1600]*4 [1800]*5	276 [276]*3 [296]*4 [296]*5	286 [486]*3 [486]*4 [286]*5	800 [1000]*1 [1200]*2	250	265	1145 [1295]*6	407	–	850 [1000]*6	760 [910]*6	90	–	–	–
ES-800sV	1620 [1820]*1 [2020]*2										300		605 [755]*6	245	140	605 [755]*6	105

※反操作时E值为301、[501]*3、[501]*4、[301]*5
D值为261、[261]*3、[281]*4、[281]*5
As anti-operator side E is 301、[501]*3、[501]*4、[301]*5
D is 261、[261]*3、[281]*4、[281]*5

※d值正操作时为104、[104]*3、[64]*4、[64]*5
反操作时为74、[74]*3、[34]*4、[34]*5
As operator side d is 104、[104]*3、[64]*4、[64]*5
anti-operator side d is 74、[74]*3、[34]*4、[34]*5

全伺服驱动机械手
Full servo drive robot

单截 Single arm

220~450ton 注塑机用
Injection press range 220~450ton

综合参数 | GENERAL SPECIFICATIONS

电 源 Power Source	常用气压 Air Pressure	驱动方式 Drive System	姿势(气缸) Posture (Air Cylinder)	气动姿势部推力(气压: 0.5Mpa时) Air Cylinder Driving Force (Air Pressure at 0.5Mpa)		控制箱 Control Box
				最大可搬重量 Max. Load	姿势力矩 Posture Torque	
AC200V +20%/-10% 50/60Hz(单相) Single Phase	0.5Mpa	AC伺服马达 AC Servo Motor	90°固定 90°Fixed	标准姿势部: 5kg[8kg] Standard posture: 5kg[8kg] (含夹具重量 Incl Chuck Weight)	20.6N·m	ES-V

机 种 Model	行程(移动量)(mm) Stroke				电源设备容量 (KVA) Electric Consumpiton	最大消费电力 (KW) Max Power Consumpiton	机器重量(kg) Net Weight		空气消耗量 (Nℓ/周期) Air Consumption (Nℓ/Cycle)
	制品上下 Ⓟ Vertical	水口上下 Ⓡ Vertical	前 后 Crosswise	走 行 Traverse			本 体 Main Body	操作盒 Pendant	
ES-1000V	1000 [1200]	–	90~1000	1800 [1600]	2.3	1.4	264	1.7	2.19
ES-1000sV		1050 [1250]	Ⓟ 245～1000 Ⓡ 105～860		3.5	2.1	285		

◎[ ]尺寸表示选项行程。
◎本体重量包括控制箱及电缆线的重量。
◎Ⓟ表示制品侧手臂,Ⓡ表示水口侧手臂。
◎关于最大可搬重量,详情请咨询敝司营业担当。

◎Figure in [ ] shows option stroke.
◎Net weight includes the weight of interlock box and driver box.
◎In the column of stroke,Ⓟstands for product side arm and Ⓡstands for runner side arm.
◎For details of the maximum allowable weight, please confirm with our sales man.

外观尺寸 | OUTER DIMENSIONS

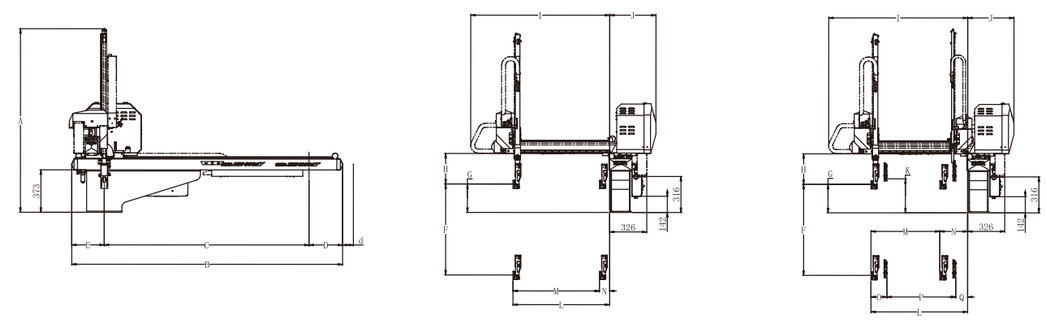

◎[ ]内的尺寸表示选项行程。/ Figure in [ ] shows option stroke.
◎水口夹的厚度为25mm。/ Thickness of runner chuck is basically about 25 mm.
◎姿势部厚度为74mm。但根据配管方式不同,此尺寸多少会有些不同。/ Thickness of posture area is basically about 74 mm (depends on tubing)
◎水口侧上下行程比制品侧上下行程长50mm。/ Runner side vertical stroke is 50 mm longer than that of product side.

◎*1表示F尺寸为1200mm。/ *1 When dimension F is 1200 mm.
◎*2表示C尺寸为1600mm。/ *2 When dimension C is 1600 mm.

(mm)

机种 Model	A	B	C	D	E	F	G	H	I	J	K	L	M	N	O	P	Q
ES-1000V	1780 [1980]*1	2382 [2382]*2	1800 [1600]*2	296 [296]*2	286 [486]*2	1000 [1200]*1	250	265	1295	407	–	1000	910	90	–	–	–
ES-1000sV	1820 [2020]*1										300		755	245	140	755	105

※反操作时E值301、[501]*1
D值281、[281]*1
As anti-operator side E is 301、[501]*1
D is 281、[281]*1

※d值正操作时为64、[64]*1
反操作时为34、[34]*1
As operator side d is 64、[64]*1
anti-operator side d is 34、[34]*1

STAR ES-V SERIES

全伺服驱动机械手
Full servo drive robot

单截 Single arm
350~650ton 注塑机用
Injection press range 350~650ton

综合参数 | GENERAL SPECIFICATIONS

电 源 Power Source	常用气压 Air Pressure	驱动方式 Drive System	姿势(气缸) Posture (Air Cylinder)	气动姿势部推力(气压: 0.5Mpa时) Air Cylinder Driving Force (Air Pressure at 0.5Mpa)		控制箱 Control Box
				最大可搬重量 Max. Load	姿势力矩 Posture Torque	
AC200V +20%/-10% 50/60Hz(单相) Single Phase	0.5Mpa	AC伺服马达 AC Servo Motor	90°固定 90°Fixed	标准姿势部: 10kg[12kg] Standard posture: 10kg[12kg] (含夹具重量 Incl Chuck Weight)	59.0N·m	ES-V

机 种 Model	行程(移动量)(mm) Stroke				电源设备容量 (KVA) Electric Consumpiton	最大消费电力 (KW) Max Power Consumpiton	机器重量(kg) Net Weight		空气消耗量 (Nℓ/周期) Air Consumption (Nℓ/Cycle)
	制品上下 Ⓟ Vertical	水口上下 Ⓡ Vertical	前 后 Crosswise	走 行 Traverse			本 体 Main Body	操作盒 Pendant	
ES-1200V	1200 [1400]	—	140～1240	1800 [1600] [2000] [2200]	2.9	1.7	460	1.7	4.85
ES-1200sV		1250 [1450]	Ⓟ 270～1240 Ⓡ 82～1052		3.5	2.1	487		

◎[ ]尺寸表示选项行程。
◎本体重量包括控制箱及电缆线的重量。
◎Ⓟ表示制品侧手臂,Ⓡ表示水口侧手臂。
◎关于最大可搬重量,详情请咨询敝司营业担当。

◎Figure in [ ] shows option stroke.
◎Net weight includes the weight of interlock box and driver box.
◎In the column of stroke,Ⓟstands for product side arm and Ⓡstands for runner side arm.
◎For details of the maximum allowable weight, please confirm with our sales man.

外观尺寸 | OUTER DIMENSIONS

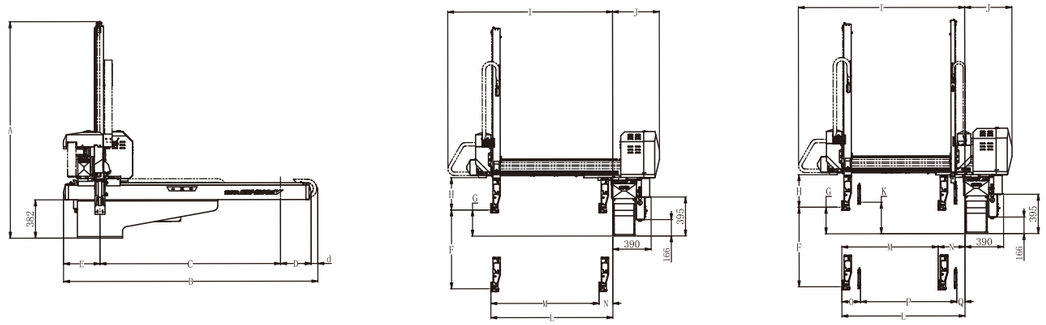

◎[ ]内的尺寸表示选项行程。/ Figure in [ ] shows option stroke.
◎水口夹的厚度为25mm。/ Thickness of runner chuck is basically about 25 mm.
◎姿势部厚度为97mm。但根据配管方式不同,此尺寸多少会有些不同。/ Thickness of posture area is basically about 97 mm (depends on tubing)
◎水口侧上下行程比制品侧上下行程长50mm。/ Runner side vertical stroke is 50 mm longer than that of product side.

◎*1表示F尺寸为1400mm。/ *1 When dimension F is 1400 mm.
◎*2表示C尺寸为1600mm。/ *2 When dimension C is 1600 mm.
◎*3表示C尺寸为2000mm。/ *3 When dimension C is 2000 mm.
◎*4表示C尺寸为2200mm。/ *4 When dimension C is 2200 mm.

(mm)

机种 Model	A	B	C	D	E	F	G	H	I	J	K	L	M	N	O	P	Q
ES-1200V	2123 [2363]*1	2469 [2469]*2 [2869]*3 [2869]*4	1800 [1600]*2 [2000]*3 [2200]*4	304	365 [565]*2 [565]*3 [365]*4	1200 [1400]*1	266	328	1675	466	—	1240	1100	140	—	—	—
ES-1200sV	2160 [2400]*1										316		970	270	188	970	82

※反操作时E值为320、[520]*2、[520]*3、[320]*4
D值为349
As anti-operator side E is 320、[520]*2、[520]*3、[320]*4
D is 349

※d值正操作时为57、[57]*2、[57]*3、[57]*4
反操作时为0、[0]*2、[0]*3、[0]*4
As operator side d is 57、[57]*2、[57]*3、[57]*4
anti-operator side d is 0、[0]*2、[0]*3、[0]*4

全伺服驱动机械手
Full servo drive robot

双截 Double arm
100~350ton 注塑机用
Injection press range 100~350ton

综合参数 | GENERAL SPECIFICATIONS

电 源 Power Source	常用气压 Air Pressure	驱动方式 Drive System	姿势(气缸) Posture (Air Cylinder)	气动姿势部推力(气压: 0.5Mpa时) Air Cylinder Driving Force (Air Pressure at 0.5Mpa)		控制箱 Control Box
				最大可搬重量 Max. Load	姿势力矩 Posture Torque	
AC200V +20%/-10% 50/60Hz(单相) Single Phase	0.5Mpa	AC伺服马达 AC Servo Motor	90°固定 90°Fixed	标准姿势部: 5kg[10kg] Standard posture: 5kg[10kg] (含夹具重量 Incl Chuck Weight)	13.1N·m [20.6N·m]	ES-V

机 种 Model	行程(移动量)(mm) Stroke				电源设备容量 (KVA) Electric Consumpiton	最大消费电力 (KW) Max Power Consumpiton	机器重量(kg) Net Weight		空气消耗量 (Nℓ/周期) Air Consumption (Nℓ/Cycle)
	制品上下 Ⓟ Vertical	水口上下 Ⓡ Vertical	前 后 Crosswise	走 行 Traverse			本 体 Main Body	操作盒 Pendant	
ESW-800V	800 [1000] [1200]	—	90～790 [90~940]	1400 [1200] [1600] [1800]	2.9	1.7	252	1.7	2.11
ESW-800sV		850 [1050] [1250]	Ⓟ 280～790 Ⓡ 154～664 [Ⓟ 280～940 Ⓡ 154～814]		3.5	2.1	277		

◎[ ]尺寸表示选项行程。
◎本体重量包括控制箱及电缆线的重量。
◎Ⓟ表示制品侧手臂,Ⓡ表示水口侧手臂。
◎关于最大可搬重量,详情请咨询敝司营业担当。

◎Figure in [ ] shows option stroke.
◎Net weight includes the weight of interlock box and driver box.
◎In the column of stroke,Ⓟstands for product side arm and Ⓡstands for runner side arm.
◎For details of the maximum allowable weight, please confirm with our sales man.

外观尺寸 | OUTER DIMENSIONS

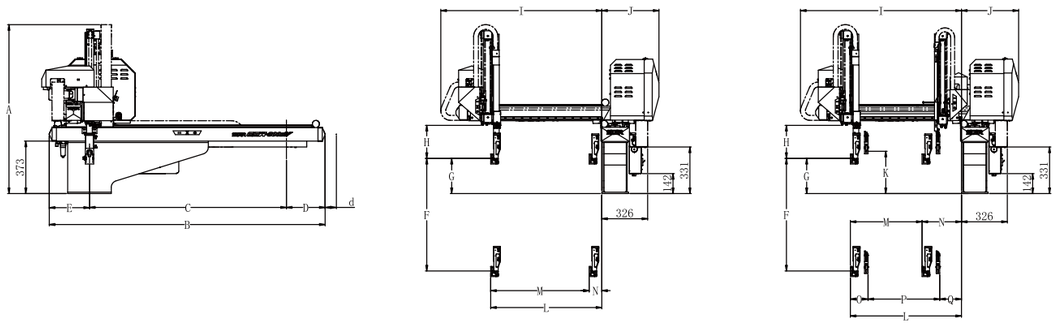

◎[ ]内的尺寸表示选项行程。/ Figure in [ ] shows option stroke.
◎水口夹的厚度为25mm。/ Thickness of runner chuck is basically about 25 mm.
◎姿势部厚度为69mm。但根据配管方式不同,此尺寸多少会有些不同。/ Thickness of posture area is basically about 69 mm (depends on tubing)
◎水口侧上下行程比制品侧上下行程长50mm。/ Runner side vertical stroke is 50 mm longer than that of product side.

◎*1表示F尺寸为1000mm。 / *1 When dimension F is 1000 mm.
◎*2表示F尺寸为1200mm。/ *2 When dimension F is 1200 mm.
◎*3表示C尺寸为1200mm。/ *3 When dimension C is 1200 mm.
◎*4表示C尺寸为1600mm。/ *4 When dimension C is 1600 mm.
◎*5表示C尺寸为1800mm。/ *5 When dimension C is 1800 mm.
◎*6表示L尺寸为940mm。/ *6 When dimension L is 940 mm.

(mm)

机种 Model	A	B	C	D	E	F	G	H	I	J	K	L	M	N	O	P	Q
ESW-800V	1200 [1300]*1 [1400]*2	1962 [1962]*3 [2382]*4 [2382]*5	1400 [1200]*3 [1600]*4 [1800]*5	276 [276]*3 [296]*4 [296]*5	286 [486]*3 [486]*4 [286]*5	800 [1000]*1 [1200]*2	250	235	1145 [1295]*6	407	—	790 [940]*6	700 [850]*6	90	—	—	—
ESW-800sV	1200 [1300]*1 [1400]*2										300		510 [660]*6	280	126	510 [660]*6	154

※反操作时E值为301、[501]*3、[501]*4、[301]*5
D值为261、[261]*3、[281]*4、[281]*5.
As anti-operator side E is 301、[501]*3、[501]*4、[301]*5
D is 261、[261]*3、[281]*4、[281]*5.

※d值正操作时为104、[104]*3、[64]*4、[64]*5
反操作时为74、[74]*3、[34]*4、[34]*5
As operator side d is 104、[104]*3、[64]*4、[64]*5
anti-operator side d is 74、[74]*3、[34]*4、[34]*5

STAR ES-V SERIES

全伺服驱动机械手
Full servo drive robot

双截 Double arm

220~450ton 注塑机用
Injection press range 220~450ton

综合参数 | GENERAL SPECIFICATIONS

电 源 Power Source	常用气压 Air Pressure	驱动方式 Drive System	姿势(气缸) Posture (Air Cylinder)	气动姿势部推力(气压: 0.5Mpa时) Air Cylinder Driving Force (Air Pressure at 0.5Mpa)		控制箱 Control Box
				最大可搬重量 Max. Load	姿势力矩 Posture Torque	
AC200V +20%/-10% 50/60Hz(单相) Single Phase	0.5Mpa	AC伺服马达 AC Servo Motor	90°固定 90°Fixed	标准姿势部: 5kg[10kg] Standard posture: 5kg[10kg] (含夹具重量 Incl Chuck Weight)	20.6N·m	ES-V

机 种 Model	行程(移动量)(mm) Stroke				电源设备容量 (KVA) Electric Consumpiton	最大消费电力 (KW) Max Power Consumpiton	机器重量(kg) Net Weight		空气消耗量 (Nℓ/周期) Air Consumption (Nℓ/Cycle)
	制品上下 Ⓟ Vertical	水口上下 Ⓡ Vertical	前 后 Crosswise	走 行 Traverse			本 体 Main Body	操作盒 Pendant	
ESW-1000V	1000 [1200]	—	90～940	1800 [1600]	2.9	1.7	276	1.7	2.22
ESW-1000sV		1050 [1250]	Ⓟ 280～940 Ⓡ 154～814		3.5	2.1	302		

◎[ ]尺寸表示选项行程。
◎本体重量包括控制箱及电缆线的重量。
◎Ⓟ表示制品侧手臂,Ⓡ表示水口侧手臂。
◎关于最大可搬重量,详情请咨询敝司营业担当。

◎Figure in [ ] shows option stroke.
◎Net weight includes the weight of interlock box and driver box.
◎In the column of stroke,Ⓟstands for product side arm and Ⓡstands for runner side arm.
◎For details of the maximum allowable weight, please confirm with our sales man.

外观尺寸 | OUTER DIMENSIONS

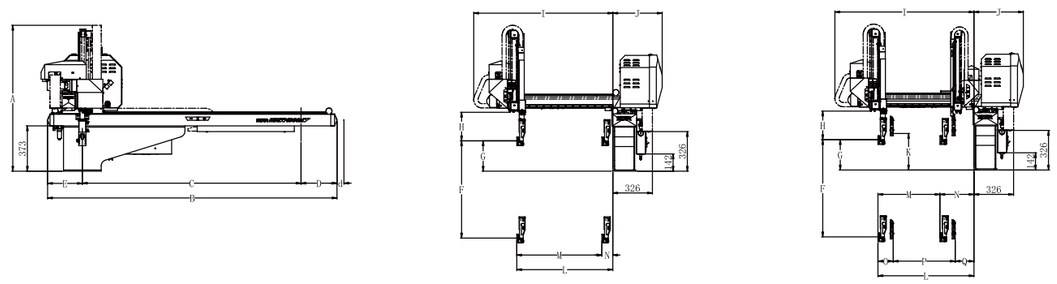

◎[ ]内的尺寸表示选项行程。/ Figure in [ ] shows option stroke.
◎水口夹的厚度为25mm。/ Thickness of runner chuck is basically about 25 mm.
◎姿势部厚度为74mm。但根据配管方式不同,此尺寸多少会有些不同。/
Thickness of posture area is basically about 74 mm (depends on tubing)
◎水口侧上下行程比制品侧上下行程长50mm。/
Runner side vertical stroke is 50 mm longer than that of product side.

◎*1表示F尺寸为1200mm。 / *1 When dimension F is 1200 mm.
◎*2表示C尺寸为1600mm。/ *2 When dimension C is 1600 mm.

(mm)

机种 Model	A	B	C	D	E	F	G	H	I	J	K	L	M	N	O	P	Q
ESW-1000V	1300 [1400]*1	2382 [2382]*2	1800 [1600]*2	296 [296]*2	286 [486]*2	1000 [1200]*1	250	235	1295	407	—	940	850	90	—	—	—
ESW-1000sV	1300 [1400]*1										300		660	280	126	660	154

※反操作时E值为301、[501]*1
D值为281、[281]*1
As anti-operator side E is 301、[501]*1
D is 281、[281]*1

※d值正操作时为64、[64]*1
反操作时为34、[34]*1
As operator side d is 64、[64]*1
anti-operator side d is 34、[34]*1

全伺服驱动机械手
Full servo drive robot

双截 Double arm

350~650ton 注塑机用
Injection press range 350~650ton

综合参数 | GENERAL SPECIFICATIONS

电 源 Power Source	常用气压 Air Pressure	驱动方式 Drive System	姿势(气缸) Posture (Air Cylinder)	气动姿势部推力(气压: 0.5Mpa时) Air Cylinder Driving Force (Air Pressure at 0.5Mpa)		控制箱 Control Box
				最大可搬重量 Max. Load	姿势力矩 Posture Torque	
AC200V +20%/-10% 50/60Hz(单相) Single Phase	0.5Mpa	AC伺服马达 AC Servo Motor	90°固定 90°Fixed	标准姿势部: 10kg[15kg] Standard posture: 10kg[15kg] (含夹具重量 Incl Chuck Weight)	59.0N·m	ES-V

机 种 Model	行程(移动量)(mm) Stroke				电源设备容量 (KVA) Electric Consumpiton	最大消费电力 (KW) Max Power Consumpiton	机器重量(kg) Net Weight		空气消耗量 (Nℓ/周期) Air Consumption (Nℓ/Cycle)
	制品上下 Ⓟ Vertical	水口上下 Ⓡ Vertical	前 后 Crosswise	走 行 Traverse			本 体 Main Body	操作盒 Pendant	
ESW-1200V	1200 [1400] [1700]	—	158～1338 [158~1538]	1800 [1600] [2000] [2200]	5.4	3.2	477	1.7	5.02
ESW-1200sV		1250 [1450] [1750]	Ⓟ 328～1338 Ⓡ 137～1147 [Ⓟ 328～1538 Ⓡ 137～1347]		6.6	4	512		

◎[ ]尺寸表示选项行程。
◎本体重量包括控制箱及电缆线的重量。
◎Ⓟ表示制品侧手臂,Ⓡ表示水口侧手臂。
◎关于最大可搬重量,详情请咨询敝司营业担当。

◎Figure in [ ] shows option stroke.
◎Net weight includes the weight of interlock box and driver box.
◎In the column of stroke,Ⓟstands for product side arm and Ⓡstands for runner side arm.
◎For details of the maximum allowable weight, please confirm with our sales man.

外观尺寸 | OUTER DIMENSIONS

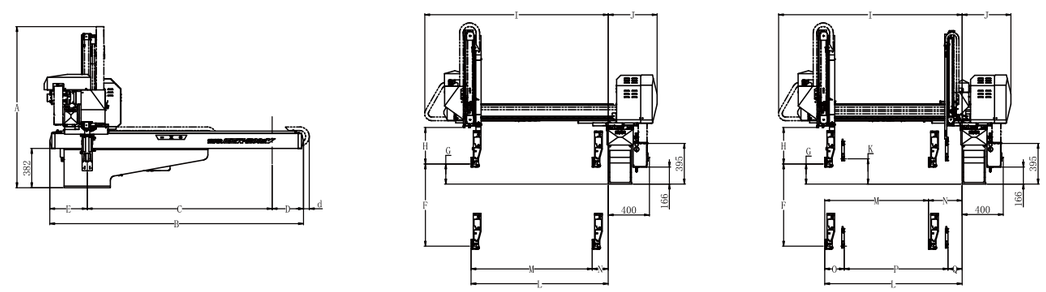

◎[ ]内的尺寸表示选项行程。/ Figure in [ ] shows option stroke.
◎水口夹的厚度为25mm。/ Thickness of runner chuck is basically about 25 mm.
◎姿势部厚度为97mm。但根据配管方式不同,此尺寸多少会有些不同
Thickness of posture area is basically about 97 mm (depends on tubing)
◎水口侧上下行程比制品侧上下行程长50mm。
Runner side vertical stroke is 50 mm longer than that of product side.

◎*1表示F尺寸为1400mm。/ *1 When dimension F is 1400 mm.
◎*2表示F尺寸为1700mm。/ *2 When dimension F is 1700 mm.
◎*3表示C尺寸为1600mm。/ *3 When dimension C is 1600 mm.
◎*4表示C尺寸为2000mm。/ *4 When dimension C is 2000 mm.
◎*5表示C尺寸为2200mm。/ *5 When dimension C is 2200 mm.
◎*6表示L尺寸为1538mm。/ *6 When dimension L is 1538 mm.

(mm)

机种 Model	A	B	C	D	E	F	G	H	I	J	K	L	M	N	O	P	Q
ESW-1200V	1551 [1647]*1 [1791]*2	2469 [2469]*3 [2869]*4 [2869]*5	1800 [1600]*3 [2000]*4 [2200]*5	304	365 [565]*3 [565]*4 [365]*5	1200 [1400]*1 [1700]*2	196	354	1773 [2018]*6	466	—	1338 [1538]*6	1180 [1380]*6	158	—	—	—
ESW-1200sV	1551 [1647]*1 [1791]*2										246		1010 [1210]*6	328	191	1010 [1210]*6	137

※反操作时E值为320、[520]*3、[520]*4、[320]*5
D值为349
As anti-operator side E is 320、[520]*3、[520]*4、[320]*5
D is 349

※d值正操作时为57、[57]*3、[57]*4、[57]*5
反操作时为0、[0]*3、[0]*4、[0]*5
As operator side d is 57、[57]*3、[57]*4、[57]*5
anti-operator side d is 0、[0]*3、[0]*4、[0]*5

周边自动化设备 | PERIPHERALS

为提高客户生产现场的自动化水平，提高生产效率、减少人手，STAR还为客户提供与机械手连动使用的FA自动化、省力化设备等周边机器。

STAR has designed for peripheral equipment of FA system and labor-saving to improve the automation level of customer production field, increase production efficiency and cut down labors.

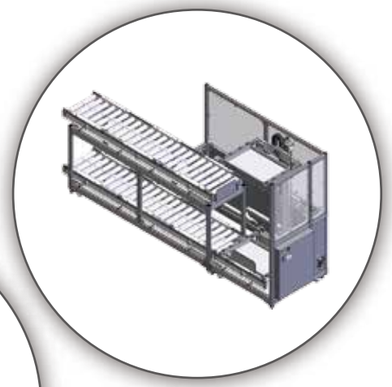

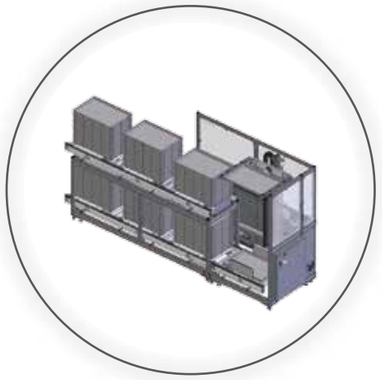

存储装置
PALLET CHANGER

STAR 自动化设备 | STAR AUTOMATION EQUIPMENT

其他自动化设备
OTHER AUTOMATION EQUIPMENT

输送带
CONVEYOR

码垛机械手
PALLETIZER

桁架机械手
GANTRY LOADER

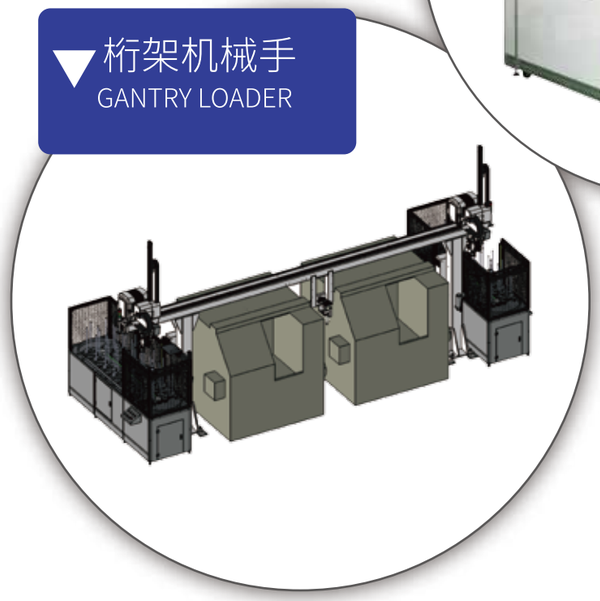

STAR eins安宜思夹具零配件 | STAR eins Chuck parts

机械手用抓手零部件 | Robot End of Arm Tooling

机器人抓手用零配件

eins 安宜思

By STAR SEIKI since 1964

eins夹具部品网上商店
http://www.eins1.cn

星精机械(STAR SEIKI)集团拥有60年注塑成型品取出的经验，
eins为集团下属机器人抓手品牌，得到了客户的一致认可。超2000种高品质抓手配件，
且根据客户需求提供最合适的机器人抓手和自动剪切的整体解决方案。

STAR SEIKI Group has 60 years of experience in injection molding products unloading.eins is a robot End Of Arm Tooling brand under the group, which has been unanimously recognized by customers.More than 2000 kinds of high-quality gripper accessories, and provide the most suitable robot gripper and automatic gate cutting overall solutionaccording to customer needs.

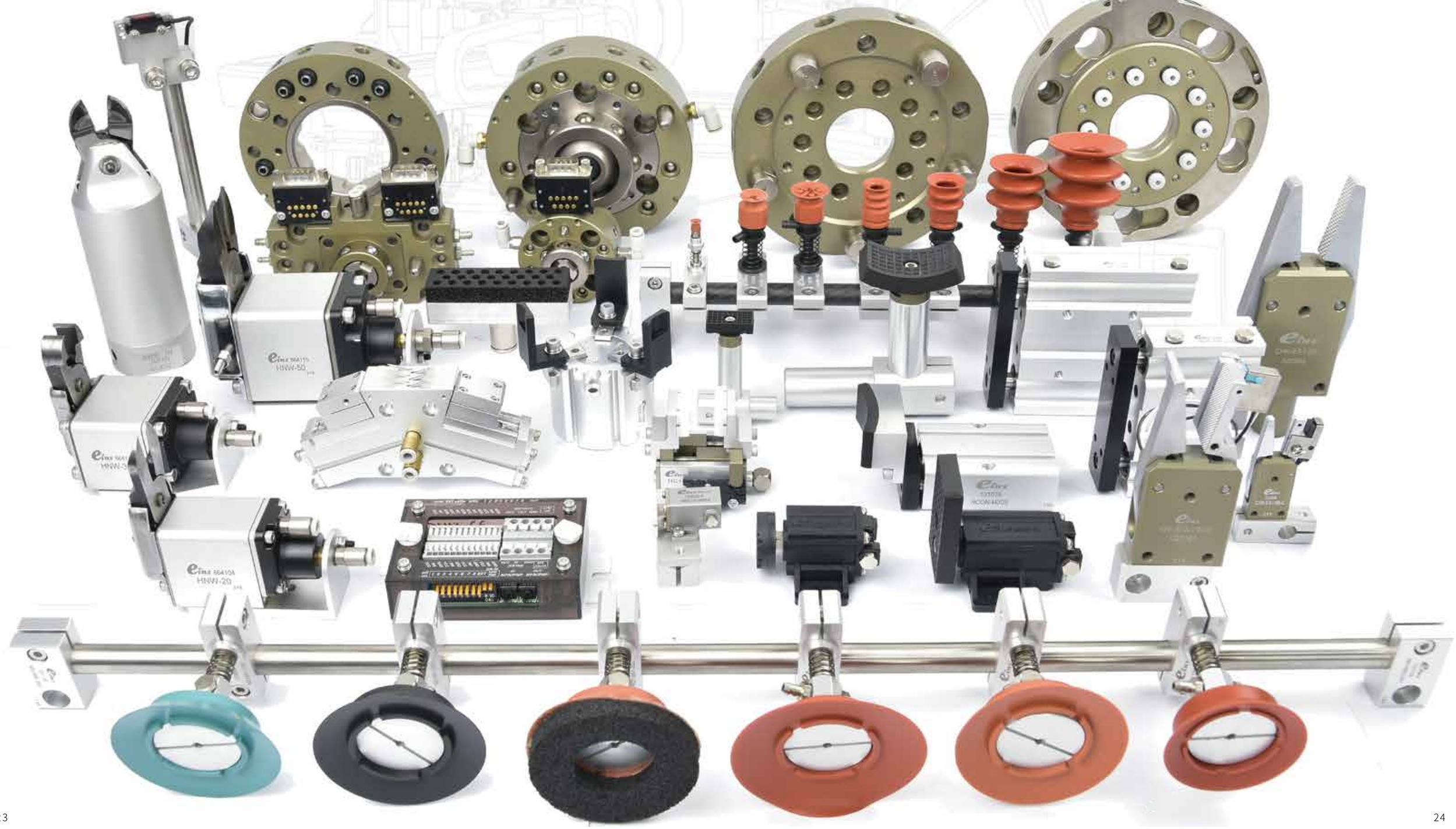

STAR常设展示厅 | STAR PLAZA

展示厅展示STAR品牌的机械手及eins夹具部品等，可以让客户更加了解我们的产品。
欢迎各位客户携带样品前来测试，同时还可以向客户提供最适用的方案。
想要了解STAR机械手或是希望实际操作体验的广大新老客户都可以前进参观学习指导。
具体报名可联络咨询对应的营业担当。

STAR PLAZA displays STAR robot and eins chuck parts, which can let customers know more about our products.
Welcome customers bring samples for test and we will provide the most suitable solution at the same time.
All new and old customers who want to know about STAR robot or want to experience the actual operation,
can come to visit and give us some comments. For specific registration, please contact with the sales man.

展示厅地址 | ADDRESS

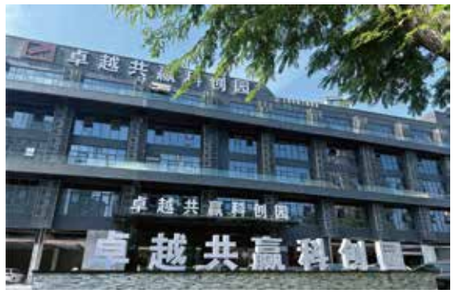

地址:广东省深圳市宝安区沙井街道堡岗社区宝安大道8179-1号S1栋A301

TEL 0755-2724 6655　FAX 0755-2962 2341

地址:江苏省苏州市新区金山路198号 安达科技园3栋1001室

TEL 0512-6805 8385　FAX 0512-6805 8250

地址:湖北省襄阳市高新区汉江北路79号中日龙科技园

TEL 0710-331 1813　FAX 0710-332 0152

深圳展示厅 | SHENZHEN PLAZA

苏州展示厅 | SUZHOU PLAZA

襄阳展示厅 | XIANGYANG PLAZA